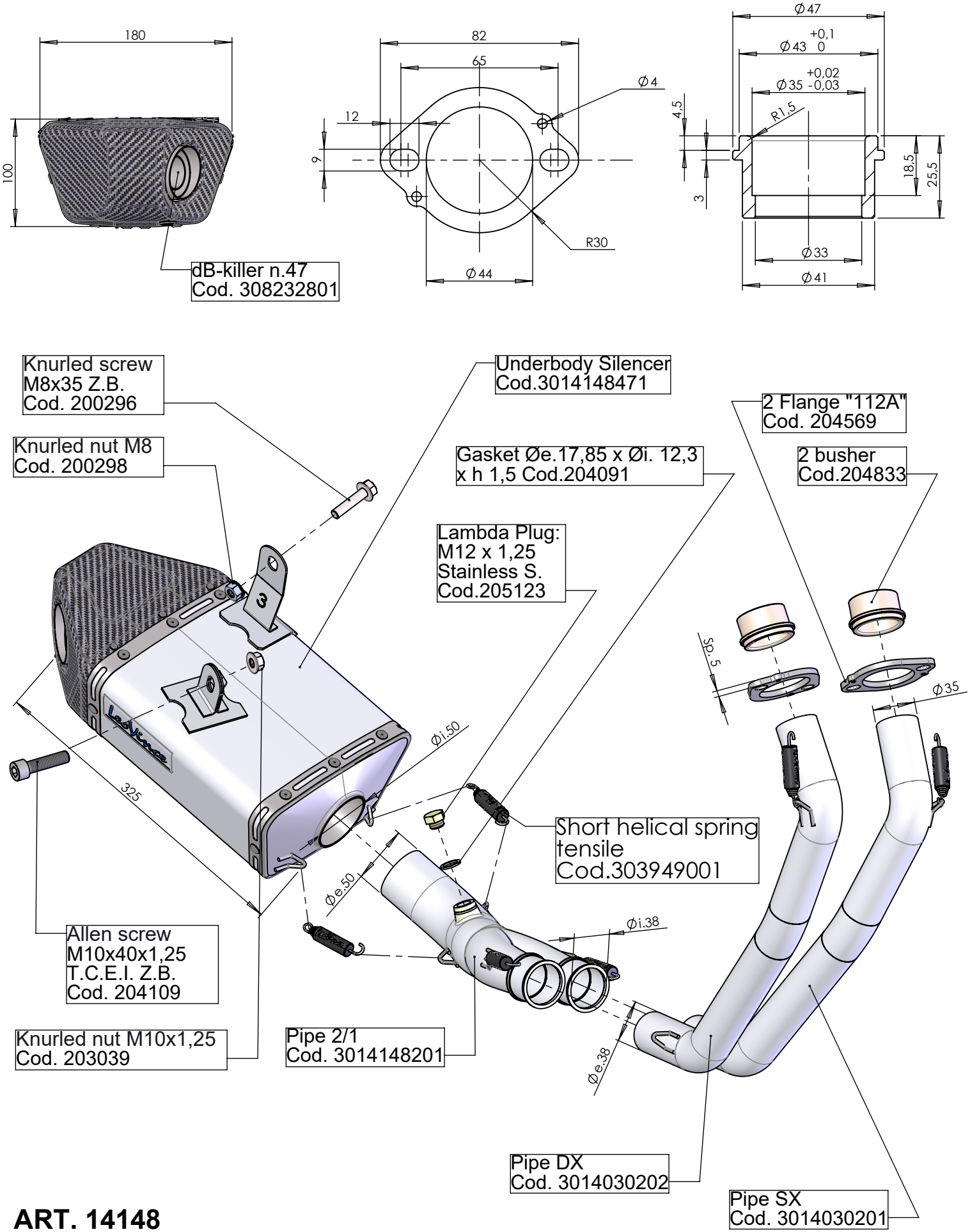

ART. 14148

YAMAHA MT-07 / MT-07 TRACER / XSR 700 (also fits 35kW versions)

FULL SYSTEM 2/1 - UNDERBODY - STAINLESS S.