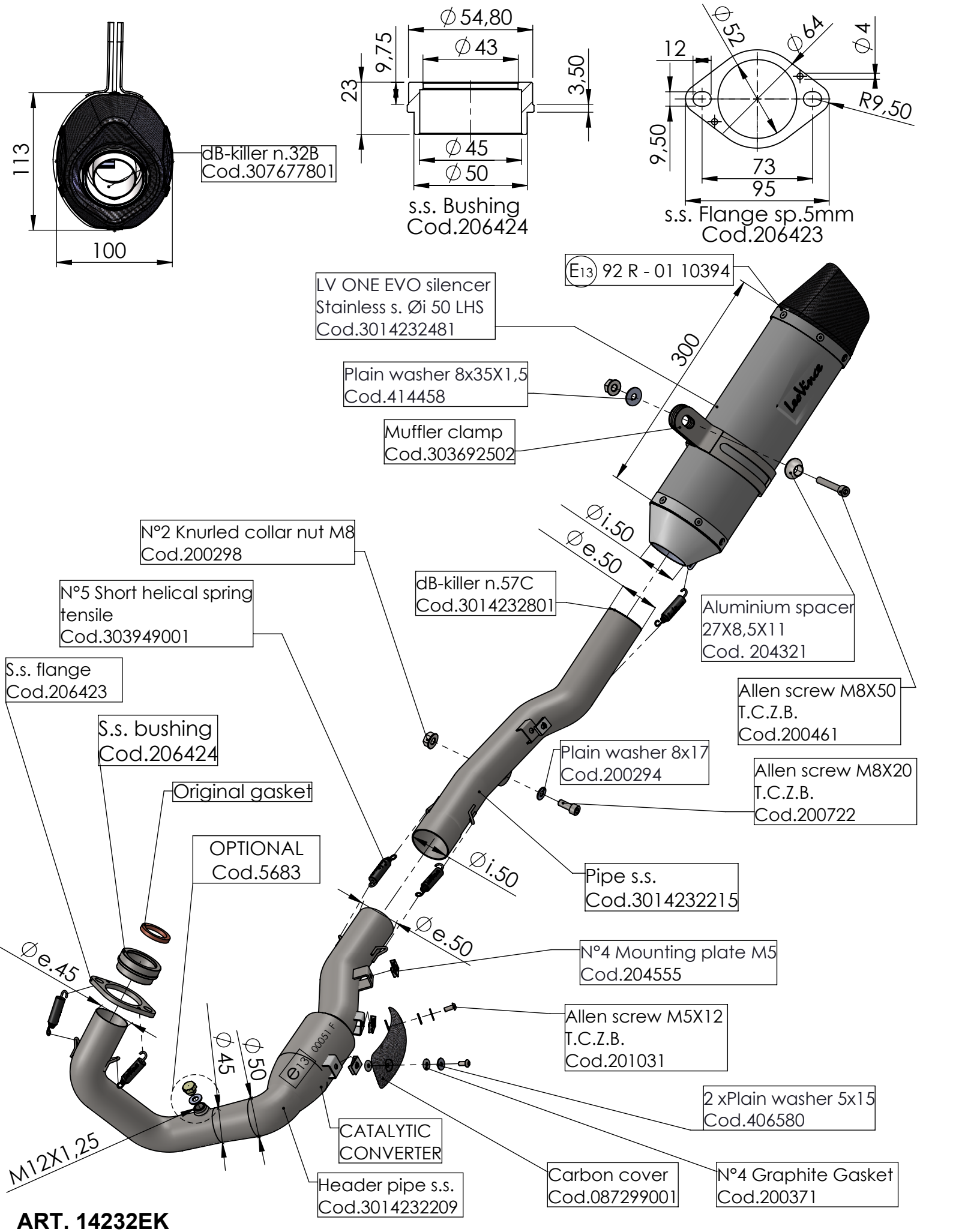

ART. 14232EK

HUSQVARNA 701 ENDURO / LR

HUSQVARNA 701 SUPERMOTO

FULL SYSTEM 1/1 - LV ONE EVO - STAINLESS S. - APPROVED