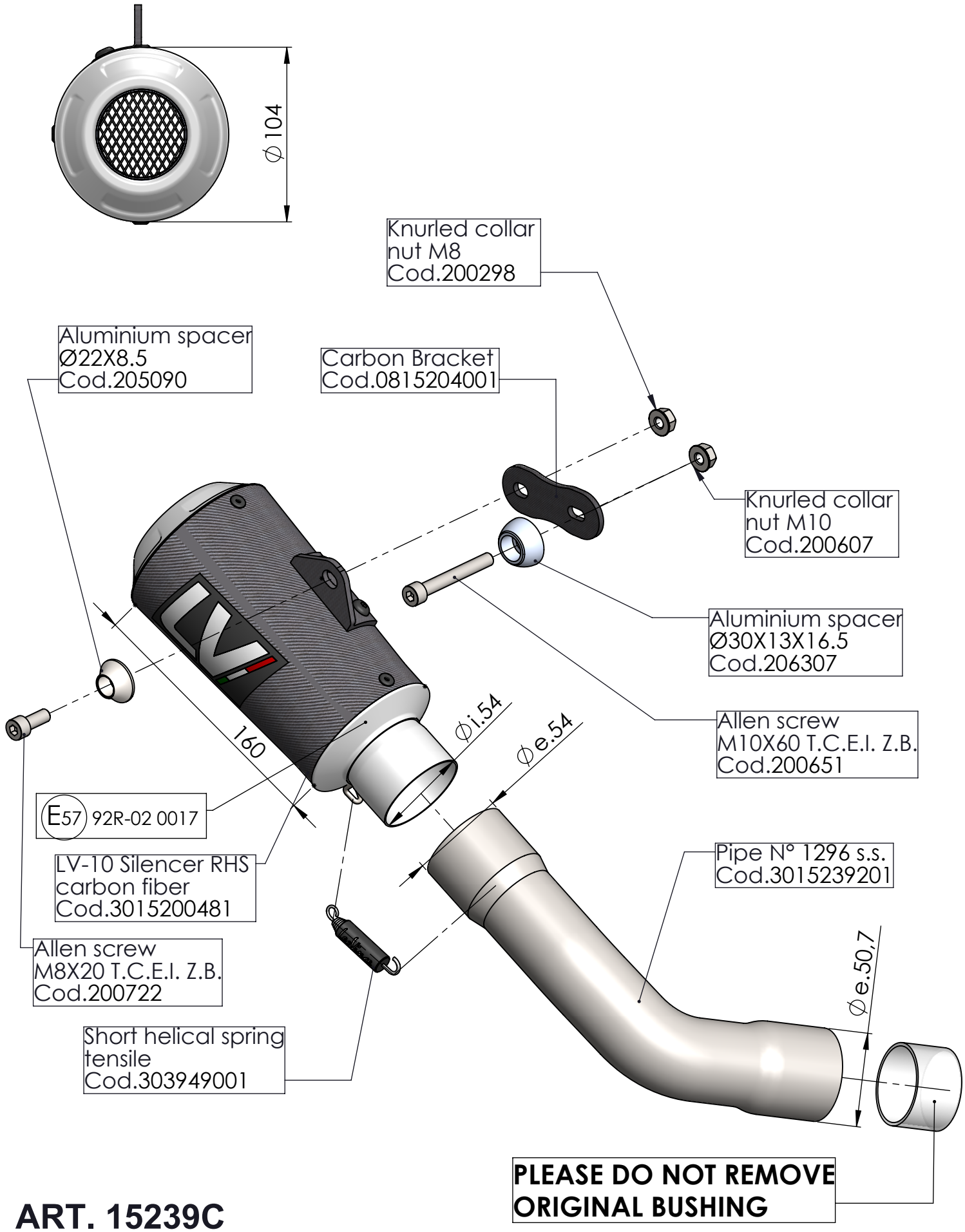

ART. 15239C

KAWASAKI Z900

SLIP-ON - LV-1O - CARBON - APPROVED