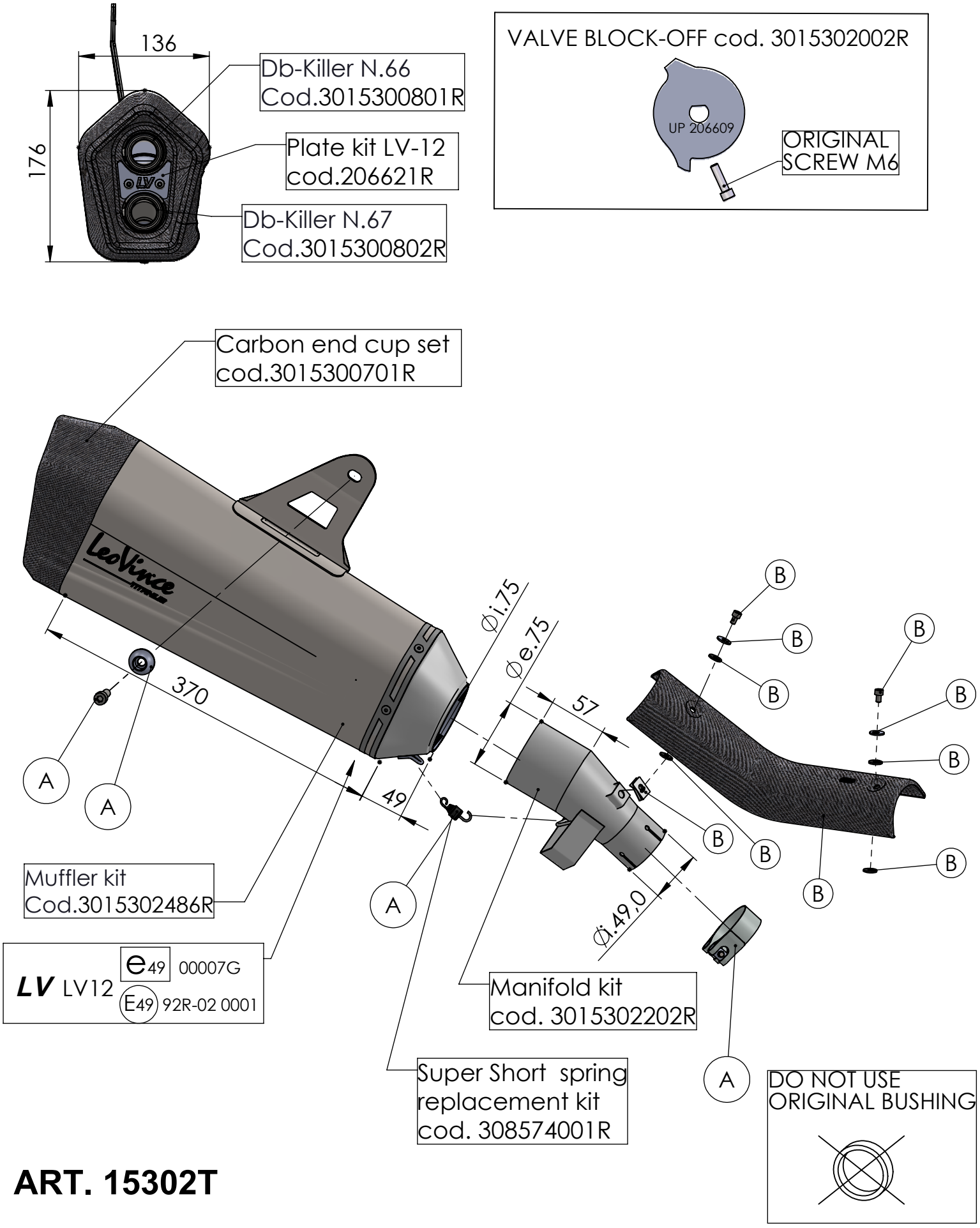

ART. 15302T

HONDA CRF 1100 L AFRICA TWIN/ADVENTURE SPORT/DCT
(fits with original panniers)

(A) FITTING KIT cod. 3015302601R
(B) CARBON COVER KIT cod. 3015302001R